Fuse blocks
with U-foot, type *WK*

selos

The fuse blocks of this type have a flip top disconnect lever. It accepts fine-wire fuses of 5 x 20, 5 x 25 and 5 x 30 mm (terminal width: 8 mm) or 6.3 x 32 mm (terminal width: 10 mm). The hinged lever has latch points both in the open and in the closed state, and can be sealed. All terminal blocks are available in two different versions, i.e. with or without red LEDs functioning as indicators. When selecting G fuse inserts, make sure that the specified maximum power loss is not exceeded. [1] The current is determined by the inserted fuse.[1] The voltage range is determined by the built-in LED display.[2]
Depending on the application and the installation method, the circumstances for increased temperature must be checked in the closed fuse holders.
Higher ambient temperatures are an additional load for the fuse inserts. Therefore, the reduction of the rated current must be considered accordingly in these applications.

[1] Maximum power loss at 23 °C ambient temperature (according to DIN EN 60947-7-3)

Type	Rated voltage	Overload protection		Exclusive short-circuit protection	
		Single arrangement	Group arrangement	Single arrangement	Group arrangement
THSI 5x20/25	250 V	1.6 W	1.6 W	4.0 W	2.5 W
THSI 6.3x32	500 V	2.5 W	2.5 W	4.0 W	2.5 W
THSI 5x30	500 V	1.6 W	4.0 W	4.0 W	2.5 W

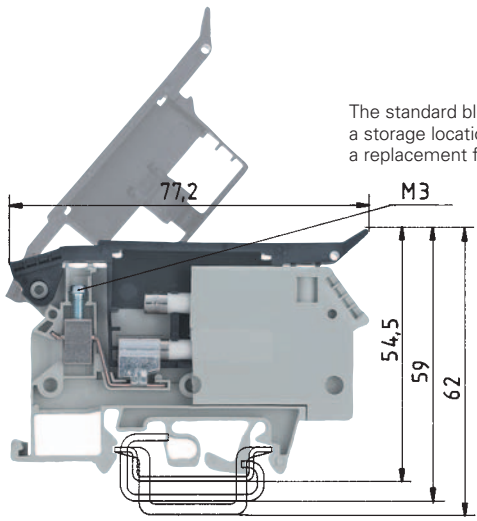

The standard block has a storage location for a replacement fuse.

for 5 mm fuses

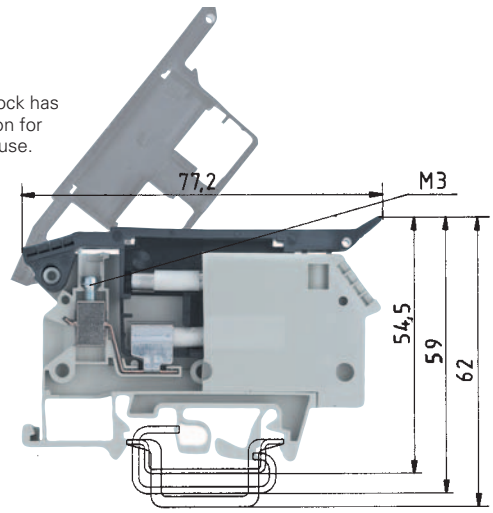

for 6.3 mm fuses

	WK 4 THSI 5... /U			WK 4 THSI 6,3... /U		
	fine-stranded	solid	V / A	fine-stranded	solid	V / A
EN 60 947-7-1, EN 60 127-6	0.5 – 4 mm²	0.5 – 6 mm²	800 V/8 kV/3[2] / 6,3[1]	0.5 – 4 mm²	0.5 – 6 mm²	800 V/8 kV/3[2] / 10[1]
UL ratings / field/factory wiring	No. 22-10	AWG	600 V[2] / 15	No. 22-10	AWG	600 V[2] / 15
CSA ratings	No. 22-10	AWG	600 V[2] / 6.3	No. 22-10	AWG	600 V[2] / 10
Width / Wire strip length	8 mm		8 mm	10 mm		8 mm
Approvals						

			Type	Part No.	Std. Pack	Type	Part No.	Std. Pack
Fuse block		gray	WK 4/THSi 5 ... U	57.904.5355.0	50	WK 4/THSi 6,3 ... U	57.904.6355.0	50
– with LED	5 - 12 V ~/⎓ current consumed.	2.3 - 7 mA	WK 4/THSi 5 LED 12 U	57.904.5455.0	50	WK 4/THSi 6,3 LED 12 U	57.904.6455.0	50
– with LED	12 - 24 V ~/⎓ current consumed.	2.8 - 6.2 mA	WK 4/THSi 5 LED 24 U	57.904.5555.0	50	WK 4/THSi 6,3 LED 24 U	57.904.6555.0	50
– with LED	24 - 60 V ~/⎓ current consumed.	1.5 - 4 mA	WK 4/THSi 5 LED 60 U	57.904.5655.0	50	WK 4/THSi 6,3 LED 60 U	57.904.6655.0	50
– with lamp	110 -250 V ~/⎓ current consumed.	0.13 - 0.55 mA	WK 4/THSi 5 GL 250 U	57.904.5755.0	50	WK 4/THSi 6,3 GL 250 U	57.904.6755.0	50
– with lamp	380 -500 V ~/⎓ current consumed.	0.2 - 0.3 mA	WK 4/THSi 5 GL 500 U	57.904.5855.0	50	WK 4/THSi 6,3 GL 500 U	57.904.6855.0	50
Fuse block		gray						
– with screw cap A DIN 41674 for G-fuses DIN 41571, 250 V, 5 x 20 mm								
– with screw cap B DIN 41674 for G fuses DIN 41576, 250 V, 5 x 25 mm								
– with screw cap A DIN 41674 for G-fuses , 500 V, 5 x 30 mm								
– with screw cap for G-fuses, 500 V, 1/4 x 1 1/4" (6.3 x 32 mm)								
Feed-through block, same dimensions as fuse block		C.: gray						
Accessories								
1. Mounting rail TS 35, DIN rail, 7.5 mm high		L = 2 m	35 x 27 x 7,5 EN 60715	98.300.0000.0	1	35 x 27 x 7,5 EN 60715	98.300.0000.0	1
Mounting rail TS 35, DIN rail 15 mm high		L = 2 m	35 x 24 x15 EN 60715	98.360.0000.0	1	35 x 24 x 15 EN 60715	98.360.0000.0	1
Mounting rail TS 32, G rail		L = 2 m	9006 EN 60715 G-32	98.190.0000.0	1	9006 EN 60715 G-32	98.190.0000.0	1
2. End clamp with U-foot		10 mm wide	WE 1/U	Z5.523.5753.0	100	WE 1/U	Z5.523.5753.0	100
End clamp TS 35, with screw		8 mm wide	9708/2 S 35	Z5.522.8553.0	100	9708/2 S 35	Z5.522.8553.0	100
End clamp TS 32, with screw		7.5 mm wide	9708	Z5.522.7053.0	100	9708	Z5.522.7053.0	100
3. End plate, 1.5 mm thick		gray						
4. Cross connector with screws, E-Cu								
uninsulated		2 pole						
		3 pole						
		to 6 pole						
5. Transparent cover (for 1 block)								

For marking systems see pages 230-237

Subject to change without further notice

Fuse blocks with U-foot, type *WK*

selos

Type	Overload protection		Exclusive short-circuit protection	
	Single arrangement	Group arrangement	Single arrangement	Group arrangement
WK 10 Si U 5x20	4.0 W/6.3 A	2.5 W/6.3 A	4.0 W/6.3 A	4.0 W/6.3 A
WK 10 Si U 6.3x32	4.0 W/10 A	2.5 W/2.5 A	4.0 W/10 A	2.5 W/2.5 A
WK 10 Si U 5x25	4.0 W/6.3 A	2.5 W/6.3 A	4.0 W/6.3 A	4.0 W/6.3 A
WK 10 Si U 5x30	4.0 W/6.3 A	2.5 W/6.3 A	4.0 W/6.3 A	4.0 W/6.3 A

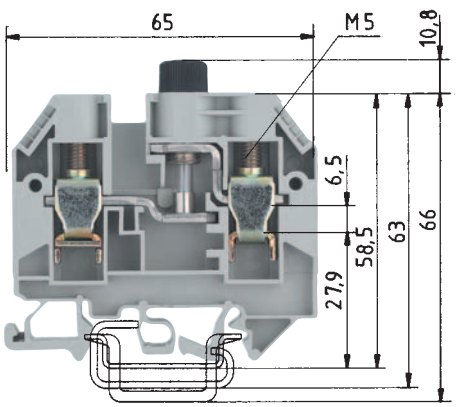

*) Voltage and current are determined by the built-in LED and the inserted G-fuse.

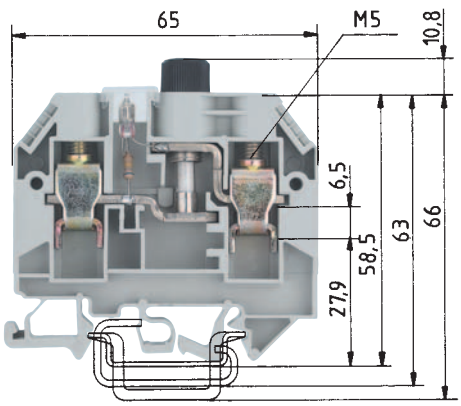

*) Voltage and current are determined by the built-in indicator and the inserted G-fuse.

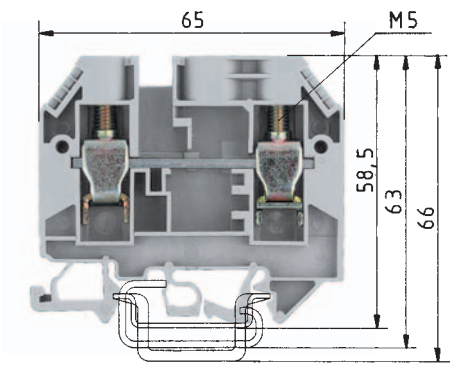

WK 10/SI ... /U

fine-stranded	solid/stranded	V	A
1 – 10 mm²	1.0 – 16 mm²	500 V/6 kV/3*)	10*)
No. 22-6 AWG		600 V*)	15
No. 16-6 AWG		600 V*)	max. 15
12 mm			13 mm

Type	Part No.	Std. Pack
WK 10/Si U 5 x 20	57.910.5055.0	50
WK 10/Si U 5 x 25	57.910.5155.0	50
WK 10/Si U 5 x 30	57.910.5255.0	50
WK 10/Si U 6,3 x 32	57.910.5355.0	50
35 x 27 x 7,5 EN 60715	98.300.0000.0	1
35 x 24 x 15 EN 60715	98.360.0000.0	1
9006 EN 60715 G-32	98.190.0000.0	1
WE 1/U	Z5.523.5753.0	100
9708/2 S 35	Z5.522.8553.0	100
9708	Z5.522.7053.0	100
AP 10/Si	07.311.4155.0	10
VB WK 10/Si-2	Z7.287.0227.0	10
VB WK 10/Si-3	Z7.287.0327.0	10
VB WK 10/Si-6	Z7.287.0627.0	10
	04.312.2056.0	100

*)	VDE	CSA	UL
57.910.5055.0	250 V ~	600 V	600 V
57.910.5155.0	250 V ~	600 V	600 V
57.910.5255.0	500 V ~	600 V	600 V
57.910.5355.0	500 V ~	600 V	600 V

Screw cap made from thermoset type 131 and silver-plated brass

WK 10/SI ... /U with indicator

fine-stranded	solid/stranded	V	A
1 – 10 mm²	1.0 – 16 mm²	500 V/6 kV/3*)	max.10*)
No. 22-6 AWG		600 V*)	15
No. 16-6 AWG		600 V*)	max. 15
12 mm			13 mm

Type	Part No.	Std. Pack
WK 10/Si U 5 x 20M, NGL	57.910.5455.0	50
WK 10/Si U 5 x 20M, GLB	57.910.5855.0	50
WK 10/Si U 6,3 x 32M, NGL	57.910.5755.0	50
WK 10/Si U 6,3 x 32M, GLB	57.910.6155.0	50
35 x 27 x 7,5 EN 60715	98.300.0000.0	1
35 x 24 x 15 EN 60715	98.360.0000.0	1
9006 EN 60715 G-32	98.190.0000.0	1
WE 1/U	Z5.523.5753.0	100
9708/2 S 35	Z5.522.8553.0	100
9708	Z5.522.7053.0	100
AP 10/Si	07.311.4155.0	10
VB WK 10/Si-2	Z7.287.0227.0	10
VB WK 10/Si-3	Z7.287.0327.0	10
VB WK 10/Si-6	Z7.287.0627.0	10
	04.312.2056.0	100

*)	VDE	CSA	UL
57.910.5455.0 Indicator red Current consumed 0.16 - 0.8 mA	110 - 250 V ~	500 V	150 V
57.910.5855.0 Indicator yellow Current consumed 24 mA	28 V ~	28 V	28 V
57.910.5755.0 Indicator red Current consumed 0.6 - 0.8 mA	110 - 500 V ~	500 V	150 V
57.910.6155.0 Indicator yellow Current consumed 24 mA	28 V ~	28 V	28 V

WK 10/SI U D

fine-stranded	solid/stranded	V	A
1 – 10 mm²	1.0 – 16 mm²	500 V/6 kV/3	57
No. 22-6 AWG		600 V	50
No. 16-6 AWG		600 V	65
12 mm			13 mm

Type	Part No.	Std. Pack
WK 10/Si U D	57.910.4955.0	50
35 x 27 x 7,5 EN 60715	98.300.0000.0	1
35 x 24 x 15 EN 60715	98.360.0000.0	1
9006 EN 60715 G-32	98.190.0000.0	1
WE 1/U	Z5.523.5753.0	100
9708/2 S 35	Z5.522.8553.0	100
9708	Z5.522.7053.0	100
AP 10/Si	07.311.4155.0	10
VB WK 10/Si-2	Z7.287.0227.0	10
VB WK 10/Si-3	Z7.287.0327.0	10
VB WK 10/Si-6	Z7.287.0627.0	10
	04.312.2056.0	100

Fuse blocks
with U-foot, type *WK*

selos

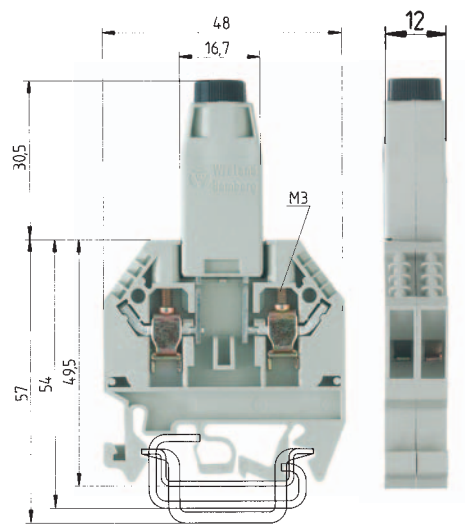

*) Voltage and current are determined by the fuse used.

Rated current in accordance to VDE 0820 T2/EN 60 127-2, up to a power loss of 1.6 W

WK 4/Si-D/U 5 x 25

	fine-stranded	solid	V	A
EN 60 947-7-1, EN 60 127-6	0.5 – 4 mm²	0.5 – 6 mm²	800 V/8 kV/3*)	6.3*)
UL ratings				
CSA ratings	No. 20-10	AWG	250 V	10
Width	12 mm			9 mm
Wire strip length				
Approvals				

		Type	Part No.	Std. Pack
Fuse block	gray			
– Fused feed-through terminal block				
(G-screw cap B DIN 41674, 5 x 25 mm – 250 V/6.3 A)		WK 4/Si-D/U 5 x 25	57.504.1655.0	50
– Fused feed-through terminal block				
(G-screw cap A DIN 41674, 5 x 20 mm – 250 V/6.3 A)		WK 4/Si-D/U 5 x 20	57.504.1755.0	50
Accessories				
1. Mounting rail TS 35, DIN rail, 7.5 mm high	L = 2 m	35 x 27 x 7,5 EN 60715	98.300.0000.0	1
Mounting rail TS 35, DIN rail 1.5 mm high	L = 2 m	35 x 24 x 15 EN 60715	98.360.0000.0	1
Mounting rail TS 32, G rail		9006 EN 60715 G-32	98.190.0000.0	1
2. End clamp with U-foot	10 mm wide	WE 1/U	Z5.523.5753.0	100
End clamp TS 35, with screw	8 mm wide	9708/2 S 35	Z5.522.8553.0	100
End clamp TS 32, with screw	7.5 mm wide	9780	Z5.522.7053.0	100
3. End plate	1.5 mm wide	AP 4 TK	07.311.6155.0	10

For marking systems see pages 230-237

Subject to change without further notice